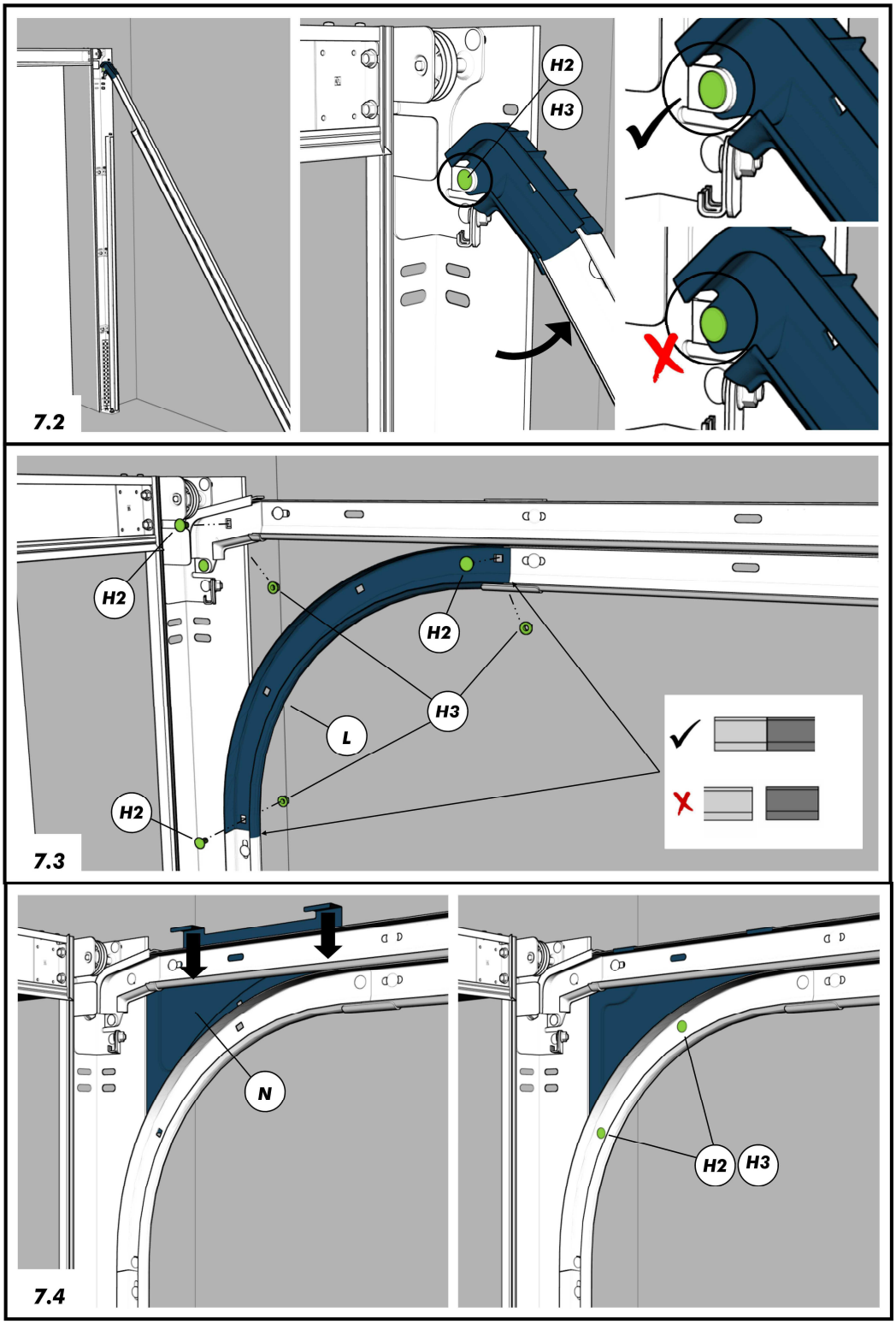
7.2
H2
H3
7.3
H2
H2
H3
L
H2
7.4
N
H2
H3

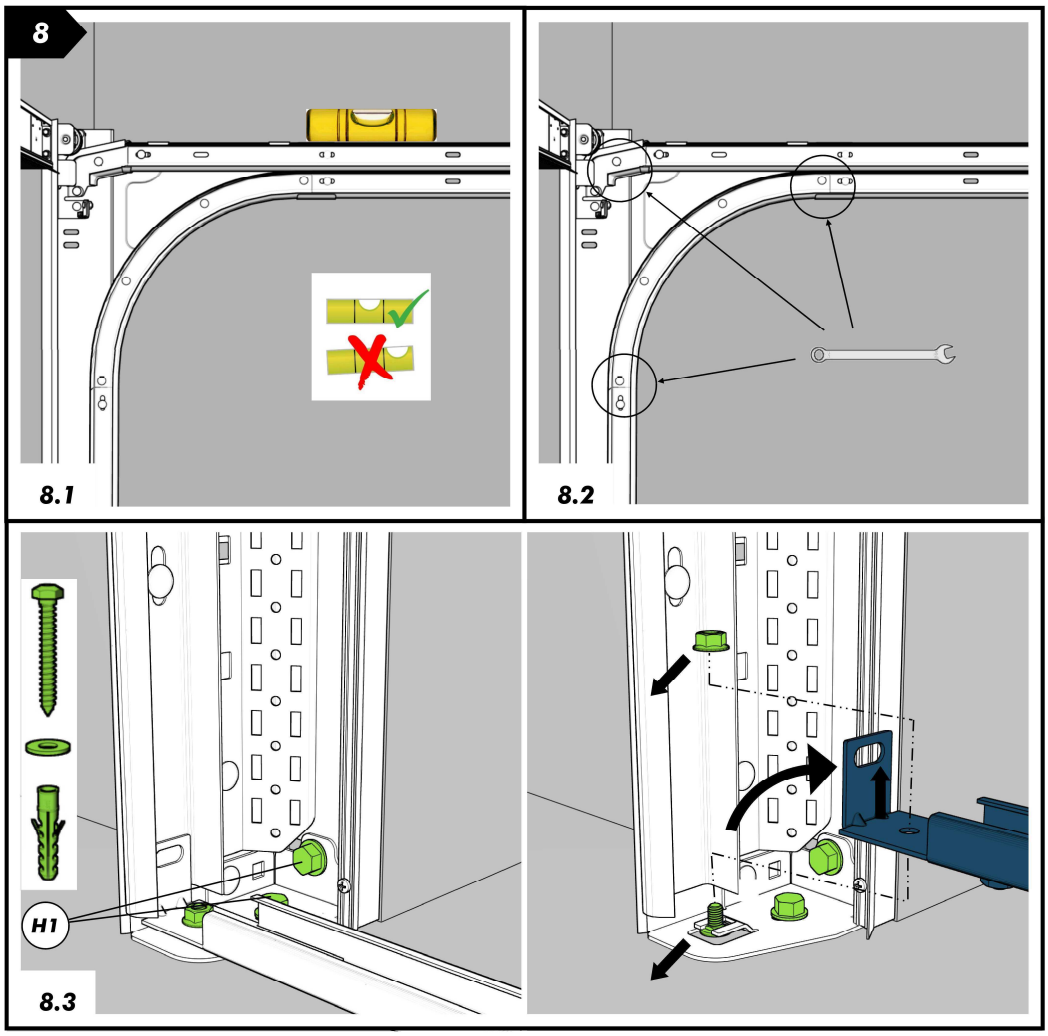
8
8.1
8.2
H1
8.3

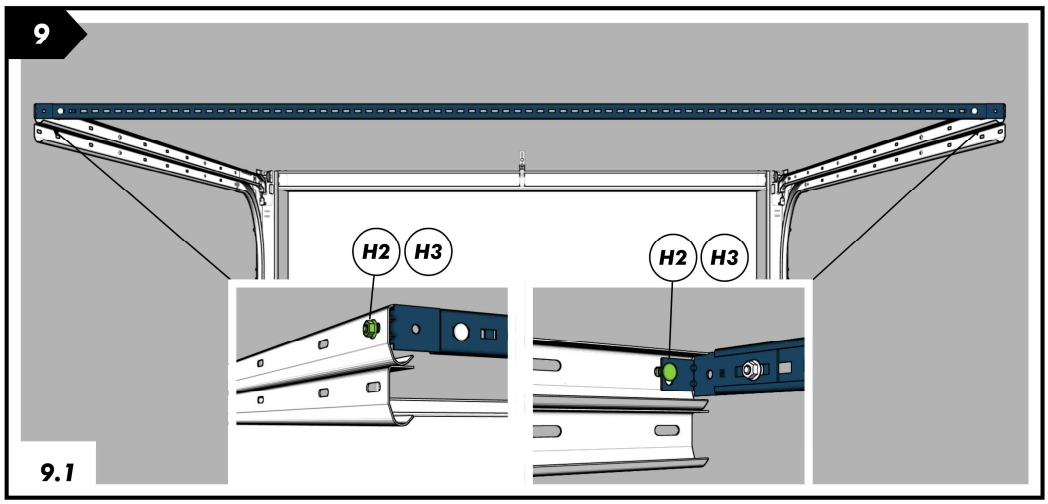
9
H2
H3
H2
H3
9.1

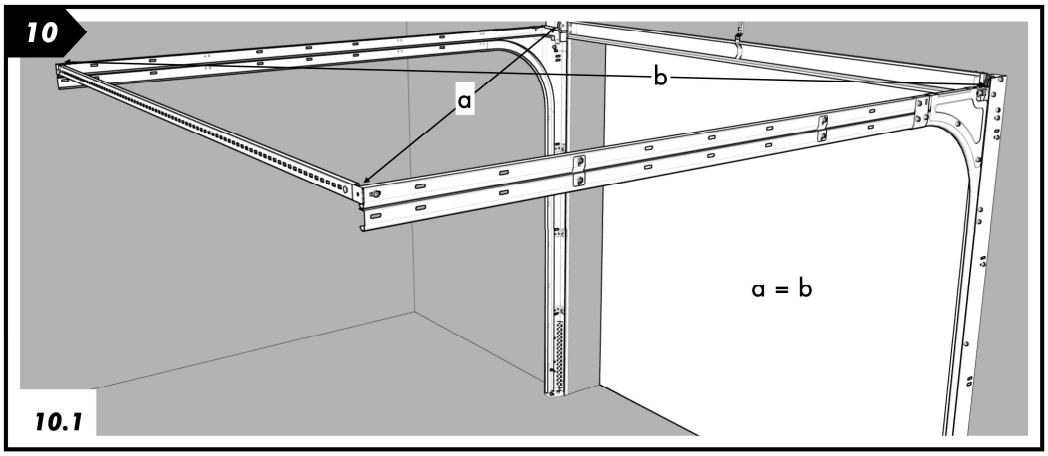
10
a
b
a = b
10.1

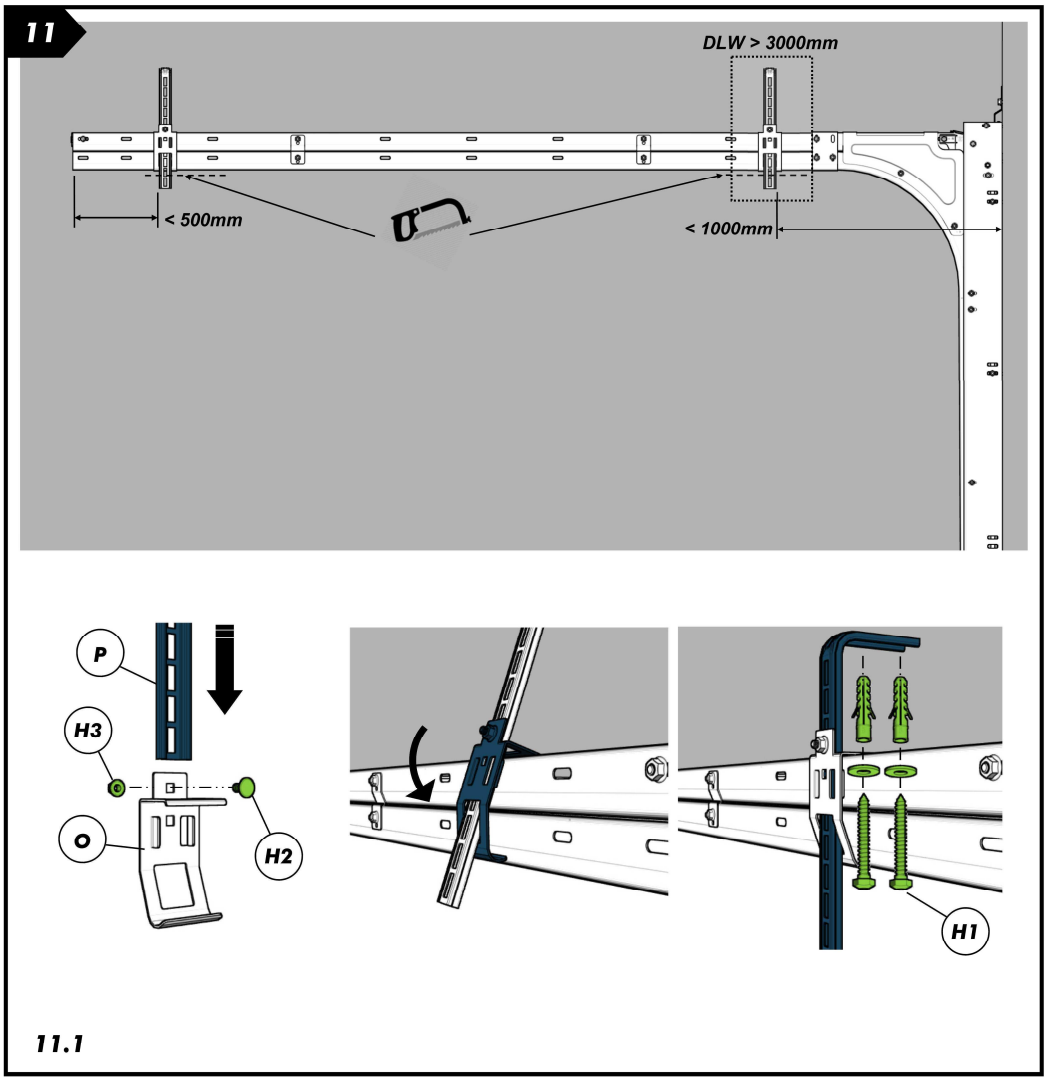
11
DLW > 3000mm
< 500mm
< 1000mm
P
H3
O
H2
H1
11.1

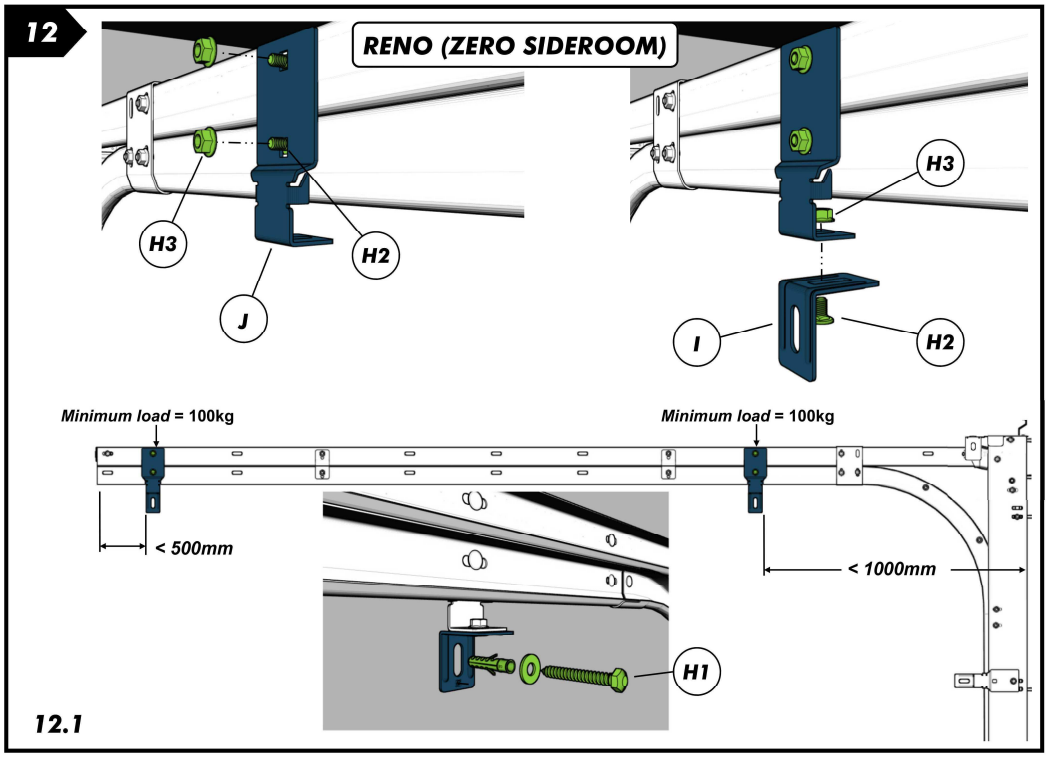
12
RENO (ZERO SIDEROOM)
H3
H2
J
H3
I
H2
Minimum load = 100kg
Minimum load = 100kg
< 500mm
< 1000mm
H1
12.1

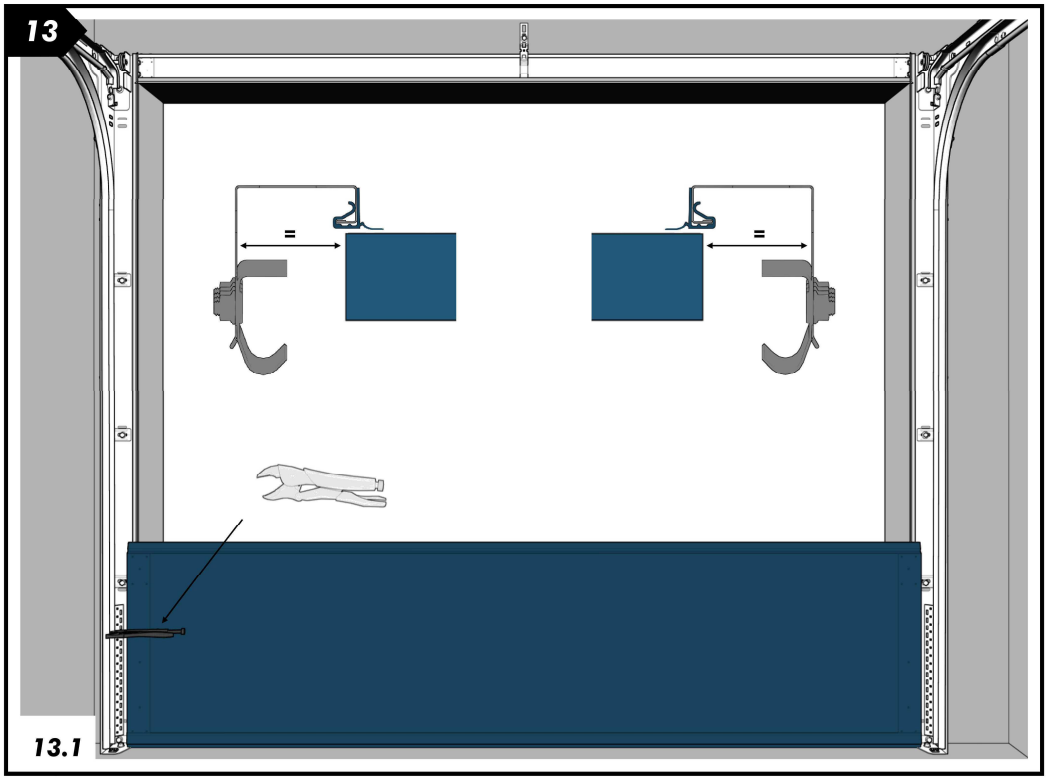
13
=
=
13.1

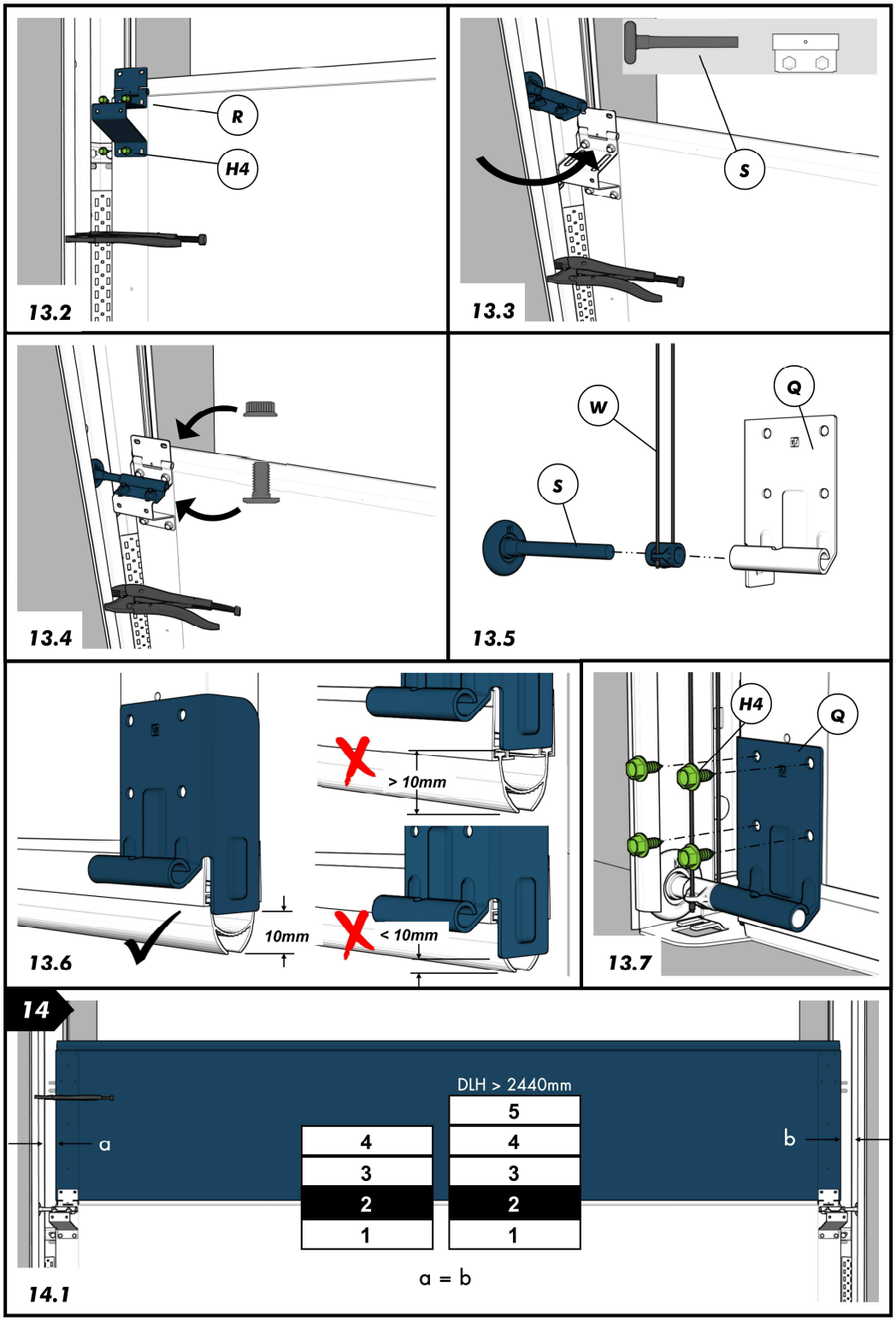
R
H4
13.2
S
13.3
13.4
W
Q
S
13.5
> 10mm
10mm
< 10mm
13.6
H4
Q
13.7
14
DLH > 2440mm
5
4
4
3
3
2
2
1
1
a
b
a = b
14.1

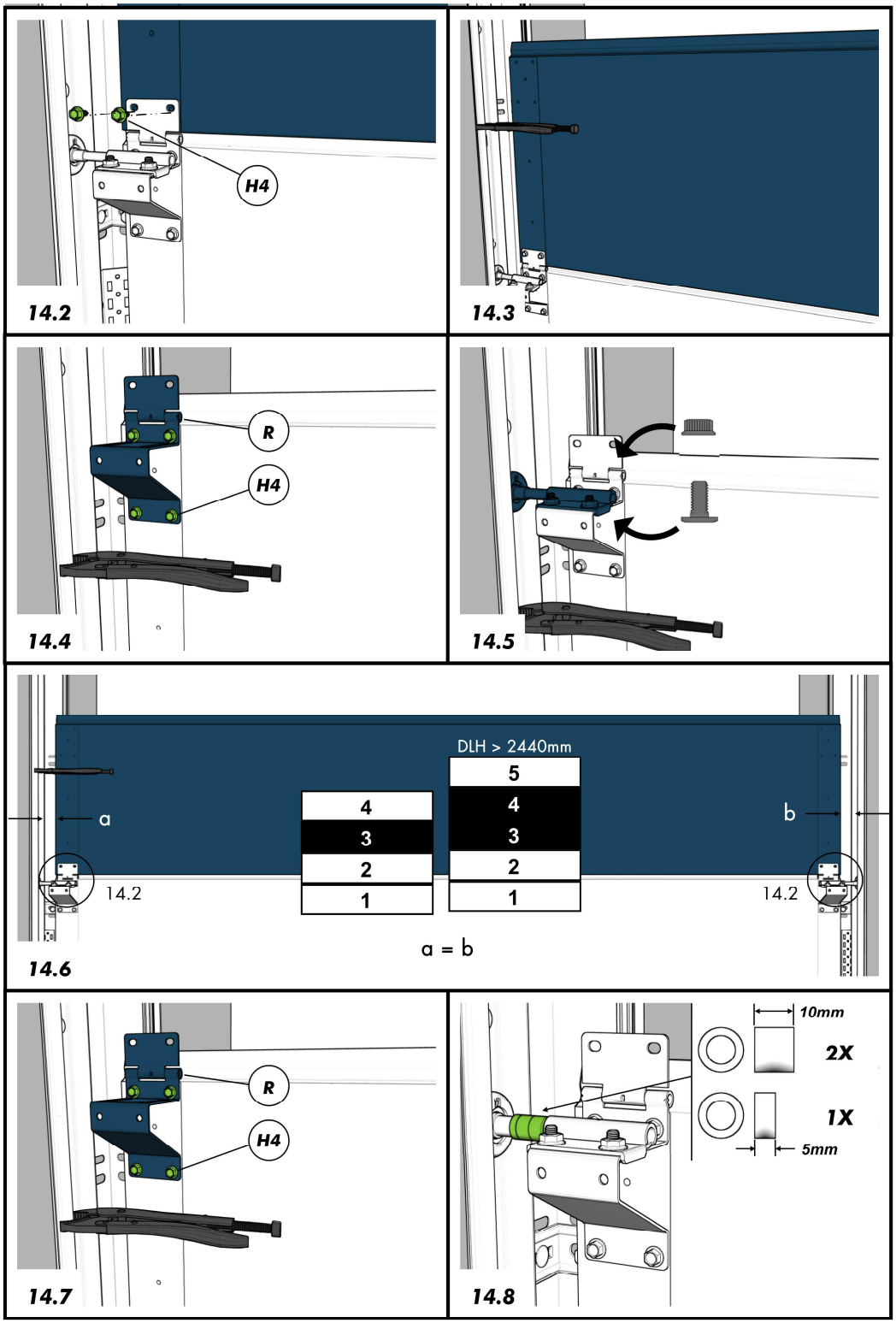
H4
14.2
14.3
R
H4
14.4
14.5
DLH > 2440mm
5
4
3
2
1
4
3
2
1
a
b
14.2
14.2
a = b
14.6
R
H4
14.7
10mm
2X
1X
5mm
14.8

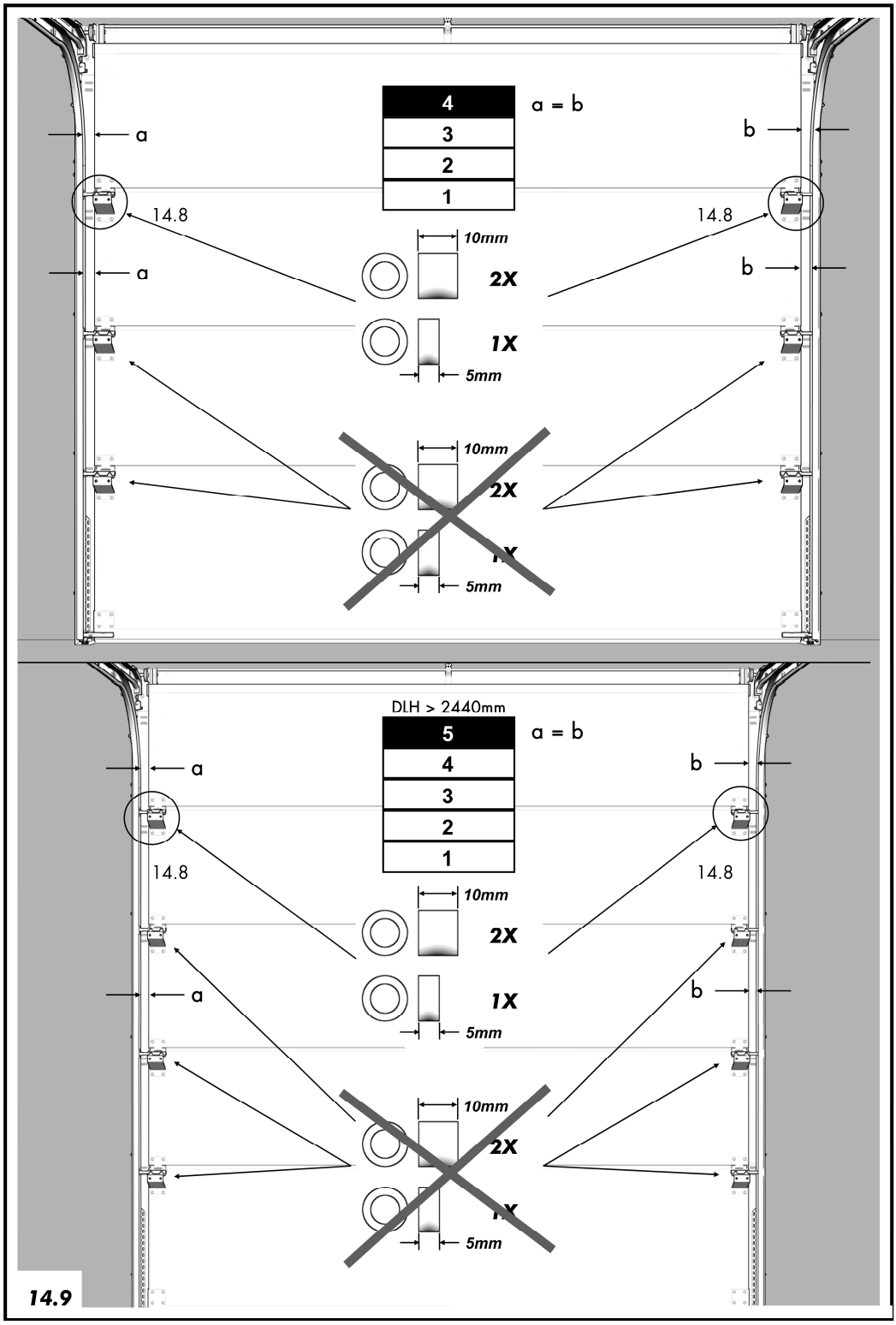
4
3
2
1
a = b
a
b
14.8
14.8
10mm
2X
1X
5mm
10mm
2X
5mm
DLH > 2440mm
5
4
3
2
1
a = b
a
b
14.8
14.8
10mm
2X
1X
5mm
10mm
2X
5mm
14.9